PUMP, VARIABLE DELIVERY
PVW, PVWW, PVWH
04/06/10 & 11/15/20

ADAPTERS

ENGINEERING | 1

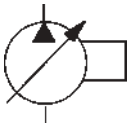

Installation Drawing — **Dual Pump Adapters**

FOR MOUNTING
PVWH SIZE 04/06/10
TO
PVWH SIZE 04/06/10 OR
05/07/10/14/20 GEAR PUMPS

ORDER CODE NO.: VA

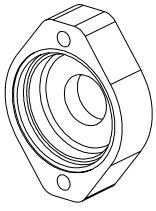

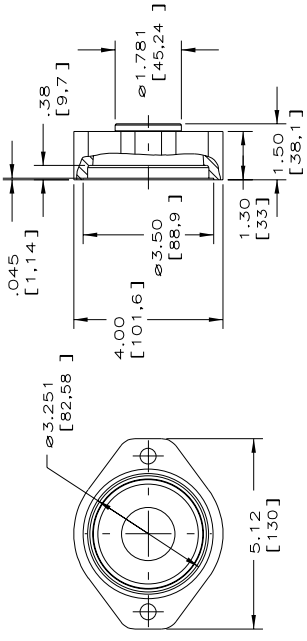

FOR MOUNTING
PVWH SIZE 11/15/20
TO
PVWH SIZE 04/06/10 OR
05/07/10/14/20 GEAR PUMPS

ORDER CODE NO.: VA

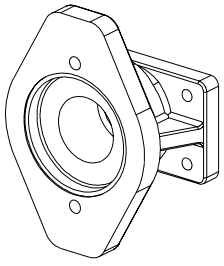

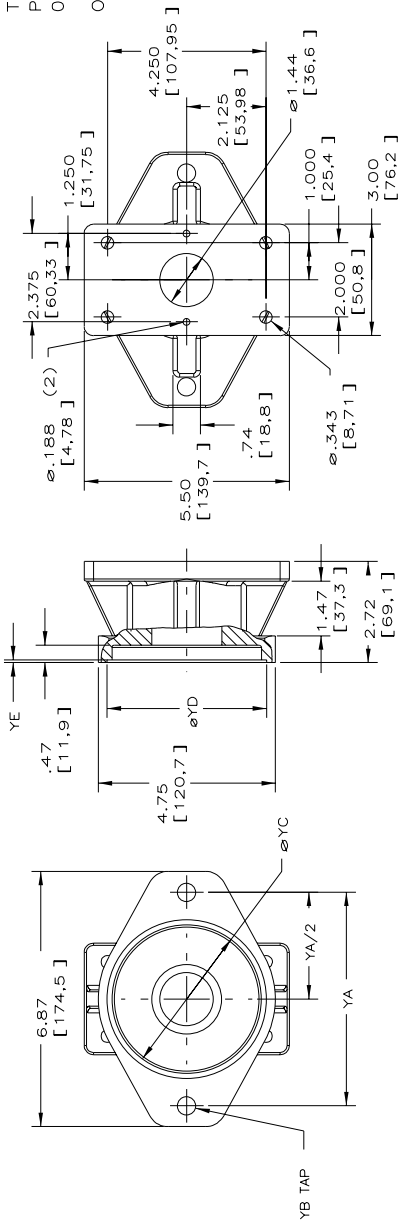

FOR MOUNTING
PVWH SIZE 11/15/20
TO
PVWH SIZE 11/15/20

ORDER CODE NO.: VB

MOUNTING DIMENSIONS

UNIT SIZE	IN/MM	YA	YB	YC	YD	YE
PVWH B TO A OR GEAR PUMP	INCH	4.188	.375–16 UNC–2B	3.251	3.500	.045
	METRIC	106,38		82,58	88,9	1,14
PVWH B TO B	INCH	5.750	.500–13 UNC–2B	4.001	4.281	.070
	METRIC	146,05		101,6	108,74	1,78

E60341

Telephone: (414) 327-1700
Fax: (414) 327-0532

OILGEAR
2300 So. 51st. Street
Milwaukee, WI USA 53219

Issued: March, 2003
DS-47979

PUMP, VARIABLE DELIVERY
PVW, PVWW, PVWH
25, 34, 45 & 60

ADAPTERS

ENGINEERING | 2

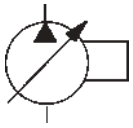

Installation Drawing

Dual Pump Adapters

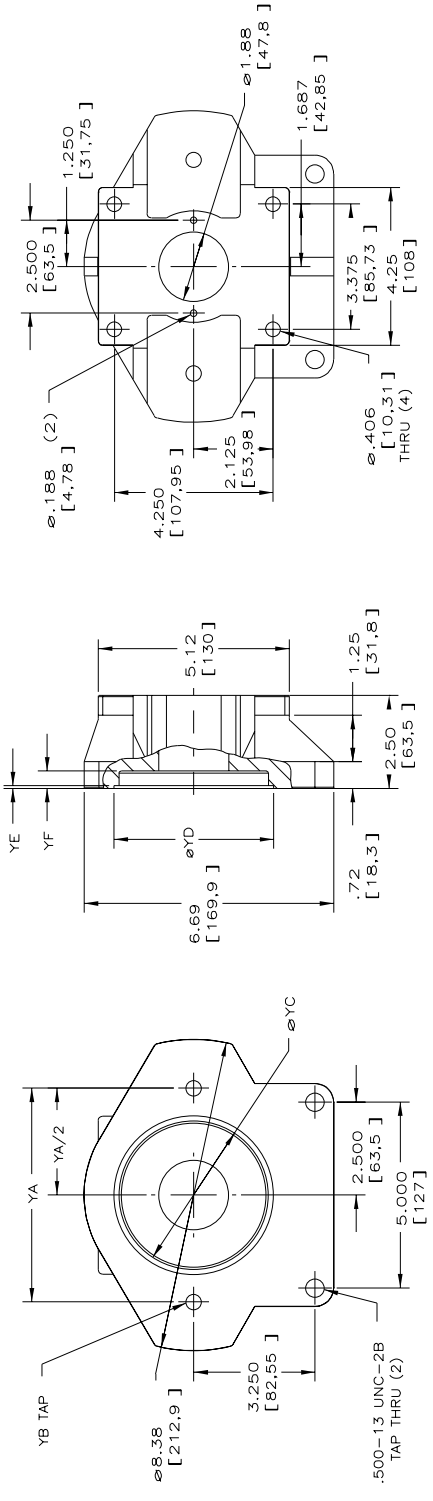

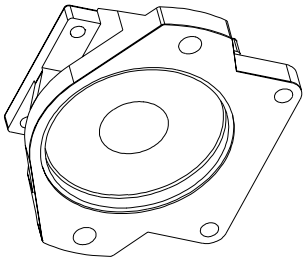

MOUNTING DIMENSIONS

UNIT SIZE	IN/MM	YA	YB	YC	YD	YE	YF
PVWH B TO A OR GEAR PUMP	INCH	4.188	.375-16 UNC-2B	3.251	3.500	.045	.47
	METRIC	106,38		82,58	88,9	1,14	11,9
PVWH B TO B	INCH	5.750	.500-13 UNC-2B	4.001	4.281	.070	.47
	METRIC	146,05		101,6	108,74	1,78	11,9
PVWH B TO C	INCH	7.125	.625-11 UNC-2B	5.001	5.281	.070	.52
	METRIC	180,98		127,03	134,14	1,78	13,2

FOR MOUNTING
PVWH SIZE 25/34/45/60
TO
PVWH SIZE 25/34/45/60

ORDER CODE NO.: VC

FOR MOUNTING
PVWH SIZE 25/34/45/60
TO
PVWH SIZE 11/15/20

ORDER CODE NO.: VB

FOR MOUNTING
PVWH SIZE 25/34/45/60
TO
PVWH SIZE 04/06/10 OR
05/07/10/14/20 GEAR PUMPS

ORDER CODE NO.: VA

OILGEAR
2300 So. 51st. Street
Milwaukee, WI USA 53219

Telephone: (414) 327-1700
Fax: (414) 327-0532