PUMP, VARIABLE DELIVERY
PVW, PVWW, PVWH
11

WITHOUT CONTROLS

ENGINEERING | **1**

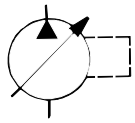

Installation Drawing — Basic Pump Without Control – Side Ported

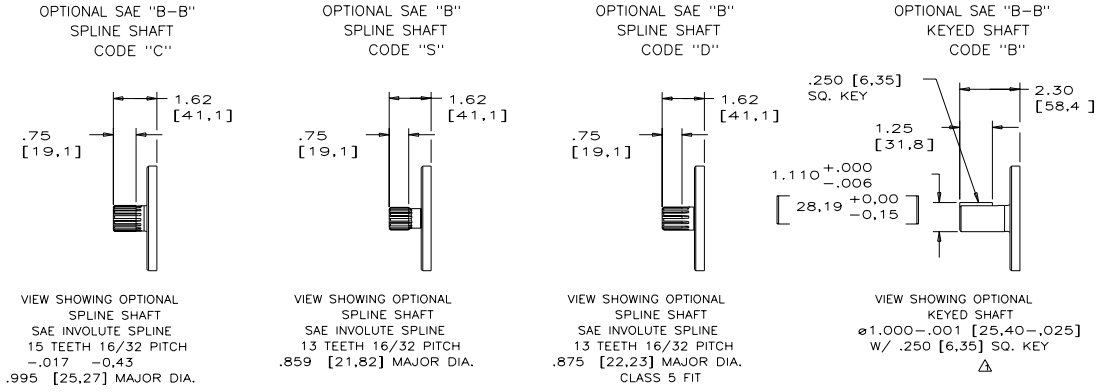

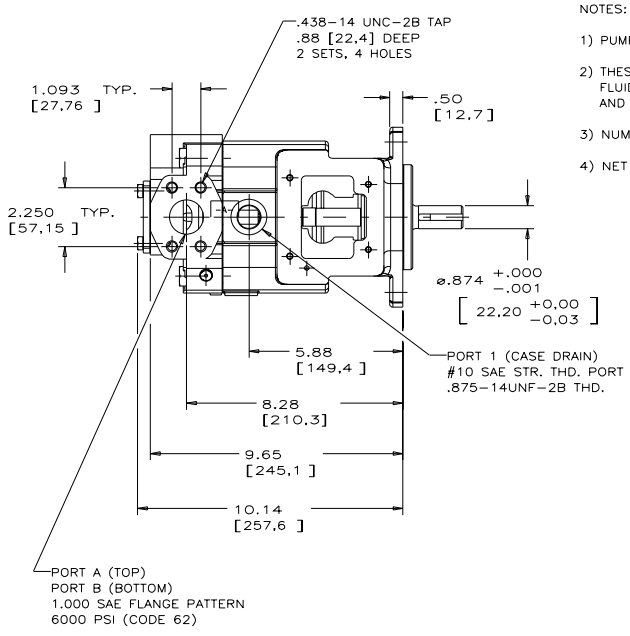

NOTES:

1) PUMPS ARE DESIGNED FOR ONE-WAY SERVICE

2) THESE UNITS ARE DESIGNED TO RUN CASE FULL OF FLUID AT ALL TIMES. FILL CASE BEFORE STARTING AND CONNECT DRAIN LINES ACCORDINGLY.

3) NUMERICAL DIMENSIONS GIVEN IN INCHES/[MM].

4) NET WEIGHT- 58 LBS. [26,31 KG].

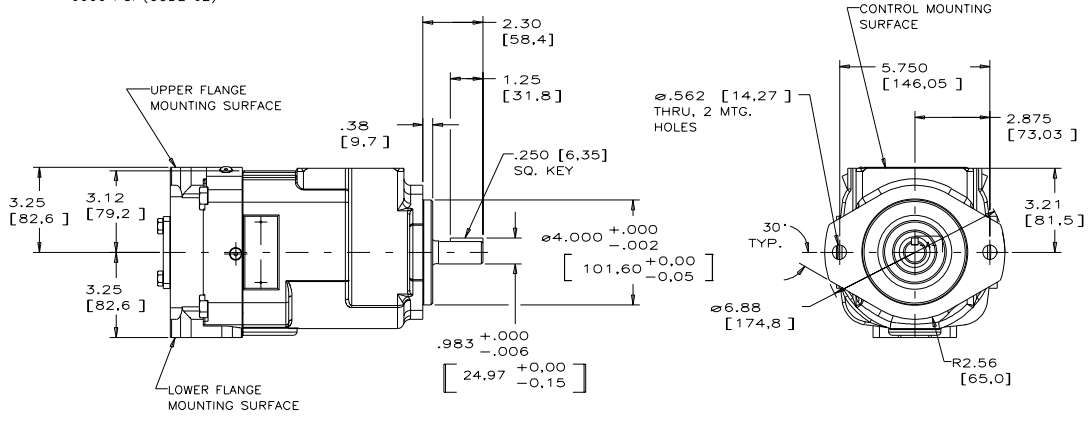

E60328-003

Telephone: (414) 327-1700
Fax: (414) 327-0532

OILGEAR
2300 So. 51st. Street
Milwaukee, WI USA 53219

Reissued: Oct., 2002
DS-47964-A