PUMP, VARIABLE DELIVERY
PVW, PVWW, PVWH
25, 34, 45 & 60

"HN" CONTROL

ENGINEERING | 1

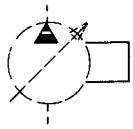

Installation Drawing

Handwheel Control

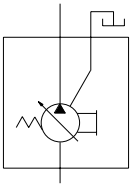

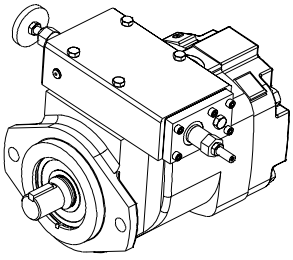

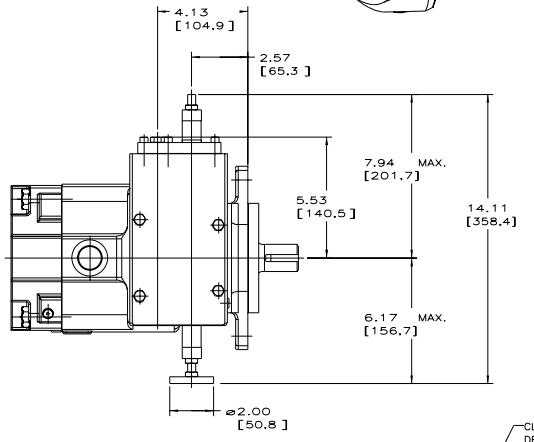

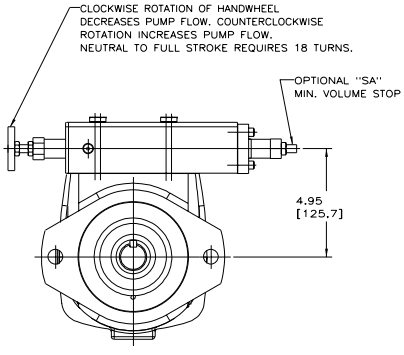

FOR BASIC PUMP DIMENSIONS
SEE PLANOGRAPHS:
SIZE 25 PUMPS DS-47966, DS-47968
SIZE 34/45/60 PUMPS DS-47967, DS-47969

E60329-006

Telephone: (414) 327-1700
Fax: (414) 327-0532

OILGEAR
2300 So. 51st. Street
Milwaukee, WI USA 53219

Issued: Oct., 1999
DS-47172